BMP015-JS-09 - FORKLIFT TIPPER BIN

www.bremco.com.au

1300 273 626

PRODUCT DESCRIPTION

Lift or tip? Why not both? Similar in features to the OS style bin, this unit has the added advantage of overhead crane lifting. This feature allows for positioning of the bin in awkward locations. The unit features a double locking device.

SPECIFICATIONS

- Tyne Pocket: 190mm x 70mm
- Tyne Pocket Centres: 640mm
- Finish: hot dip galvanised
- NB: Compliance plate & serial number attached
- WLL: 1000kg

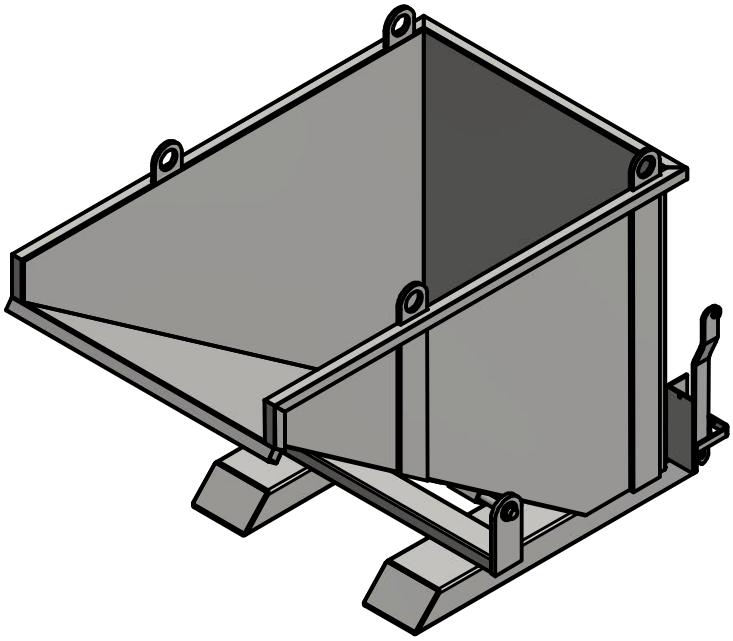

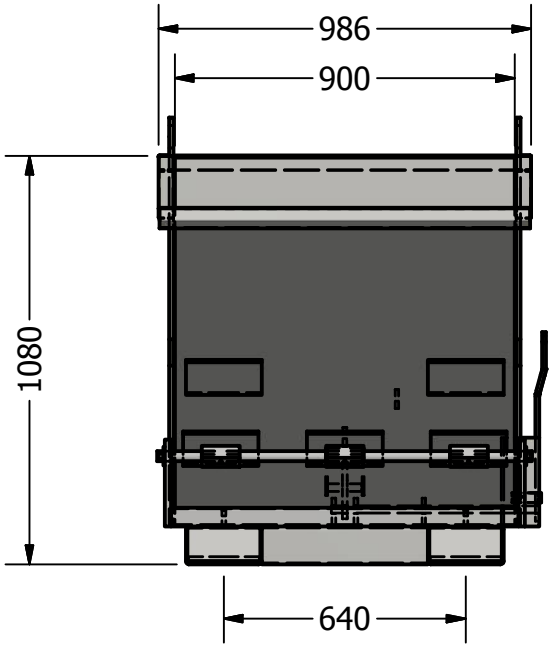

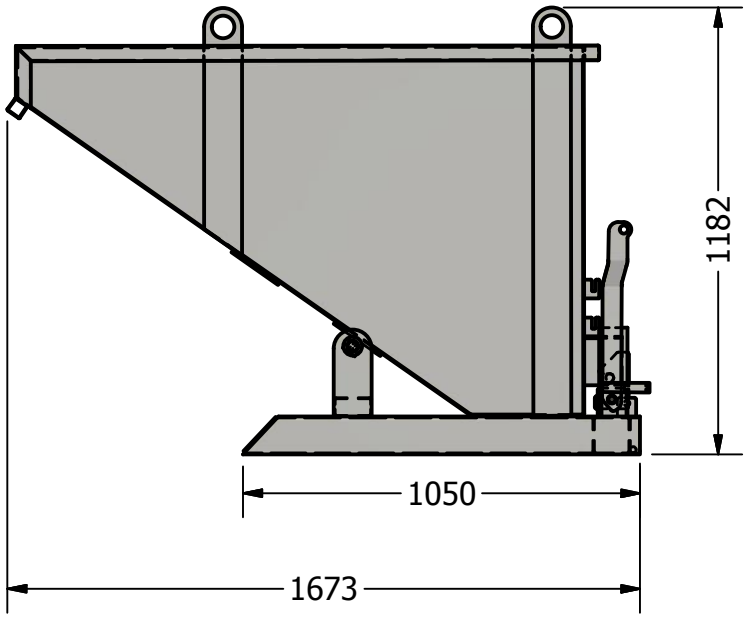

FINISH: HOT DIP GALVANISED	NOTES:	BREMCO METAL PRODUCTS	
WLL: 1000Kg	SPECIFICATIONS SUBJECT TO CHANGE WITHOUT NOTICE	BMP015-JS-09	
HCoG: 615 / VCoG: 460	This document is the property of Bremco Metal Products P/L. It must not be copied or reproduced without the written consent of the company.	DRAWING #: 015-JS-09-SPEC	DATE : 17/02/2017
TARE: 224.273 kg		SHEET #: 1 of 1	REVISION : A
STANDARDS: AS 4991			